MB27

Moisture Analyzer

Ideal for routine moisture analysis requiring precise results.

The new OHAUS MB27 Basic Moisture Analyzer combines high quality and durable construction into a sleek, compact design. The MB27 offers dependable, accurate results for a wide variety of moisture analysis applications.

Standard Features Include:

- **Flexible Performance**—The MB27 provides accurate results at 0.01% (0,001g). With a large capacity of 90 g, it is ideal for food, agriculture, chemical, pharmaceutical and other applications that require measurements up to 0.01% (0,001g).
- **Simple to Operate**—Set up and operation is extremely easy. Just press and hold the temperature or time buttons to set drying parameters. The MB27 is ideal for routine tasks performed by operators of all skill levels.
- **Compact, Easy-to-Clean Design**—The compact footprint (17 × 14 × 28 cm) of the OHAUS MB27 is designed to take up less space. The easy-to-clean heating chamber is ideal for frequent use and inexpensive maintenance.

MB27 *Moisture Analyzer*

Model	MB27
Capacity	90 g
Repeatability (Std Dev) (g)	0.2% (3 g sample) 0.05% (10 g sample)
Readability	0.01%/0.001 g
Sample size	typical: 3g - 20gminimum: 0,5g
Interface	Bidirectional RS232
Timer	1-99 minutes, 30-second increments to 60 minutes
Heating Technology	Halogen
Temperature Range	50 °C to 160 °C in 5 °C increments
Power	100 to 240 VAC, 50/60 Hz
Tare Range	To capacity by subtraction
Operating Temperature Range	5 °C to 40 °C
Display Type	Backlit LCD
Displays	%moisture or %solids or weight (g), temperature, time
Pan Size (Diameter)	90 mm
Dimensions (W × H × D)	17 × 14 × 28 cm
Net Weight	2.3 kg
Shipping Weight	3.9 kg

Compliance

- **Product Safety:** IEC/EN 61010-1, IEC/EN 61010-2-010
- **Electromagnetic Compatibility:** IEC/EN 61326-1 Class B, Basic environments

Accessories

Temperature Calibration Kit, MB Series 11113857
Anti-Theft Device..... 80850043
Aluminum Sample Pans, 80 Pcs..... 80850086
Pads, Glass Fiber, Qty 200 Pcs 80850087
In-Use-Cover 80252475
Pan Holder, MB Series 80252476
Sample Cage, MB Series 80252477
Reusable Sample Pans, 3 Pcs, 7mm, MB Series 80252478
Reusable Sample Pans, 3 Pcs, 14mm, MB Series80252479
Impact Printer SF40A..... 30064202
Thermal Printer, STP-103, EU 80251993

Outline Dimensions

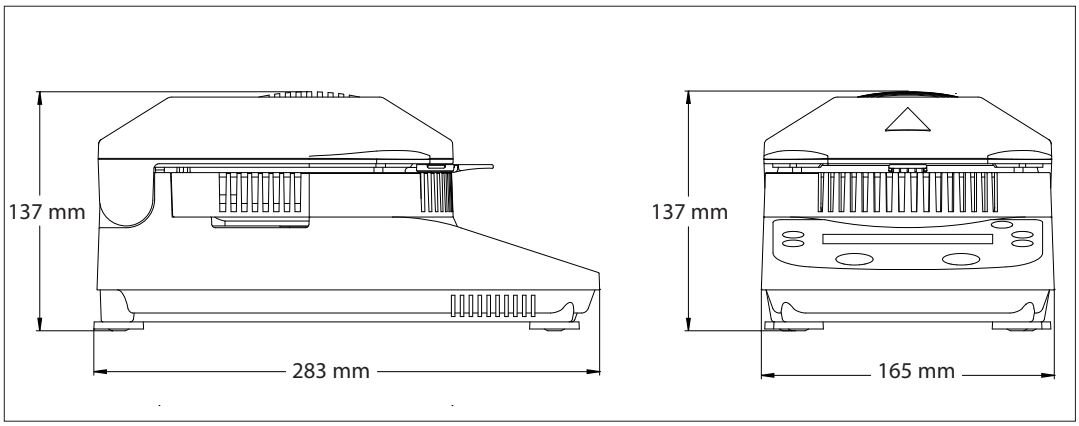

OHAUS Europe GmbH
Im Langacher 44
8606 Greifensee
Switzerland

e-mail: ssc@ohaus.com
Tel: 0041 22 567 53 19
e-mail: tsc@ohaus.com
Tel: 0041 22 567 53 20

www.ohaus.com

OHAUS Corporation is an ISO 9001:2008 manufacturer

ISO 9001:2008
Registered Quality Management System

CH16B065

80774873 © Copyright OHAUS Corporation